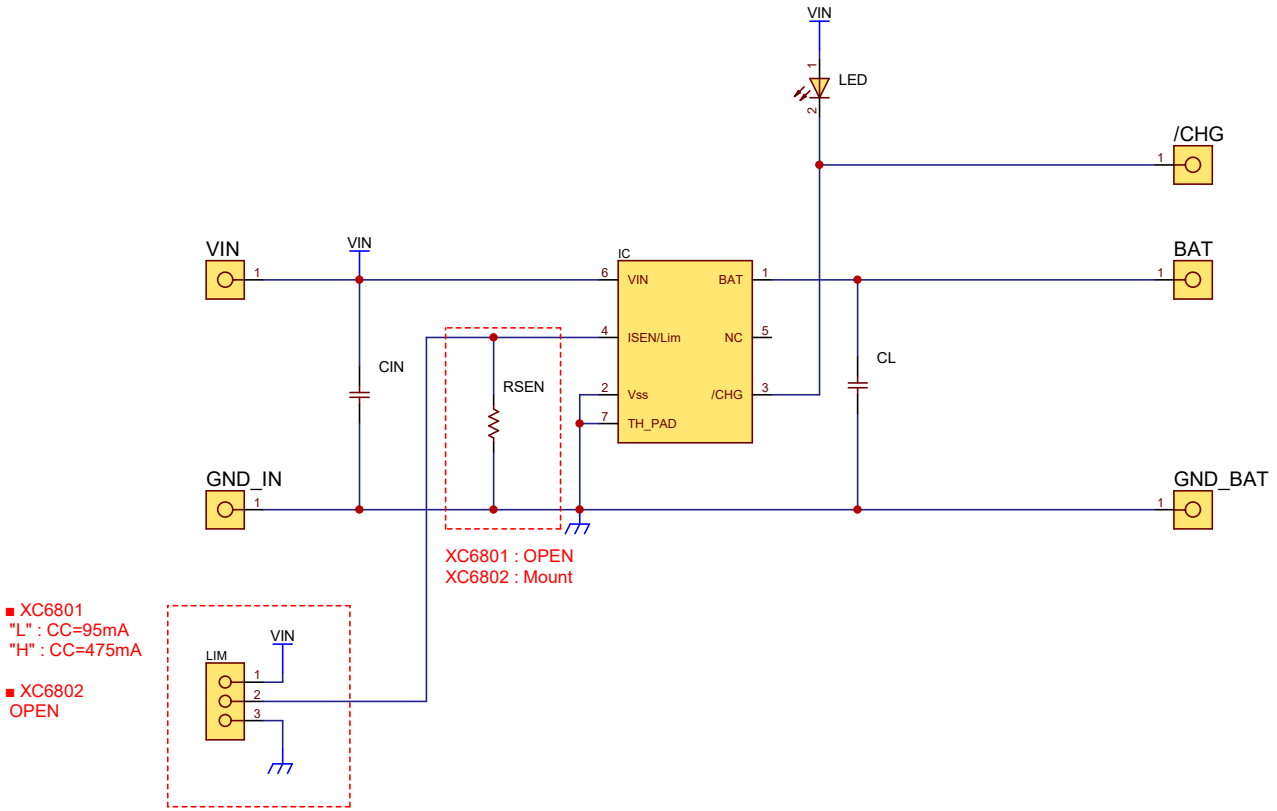

Series Name	XC6801/XC6802
Category Name	Battery Charger
Packages	USP-6C,USP-6EL
TOREX SEMICONDUCTOR	A4
	1 / 1